ZH Horizontal detachable

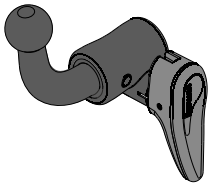
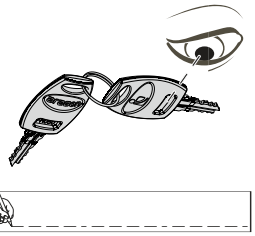
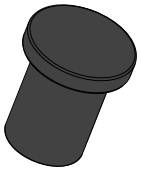



IN

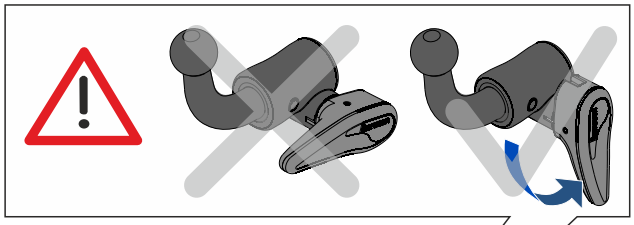
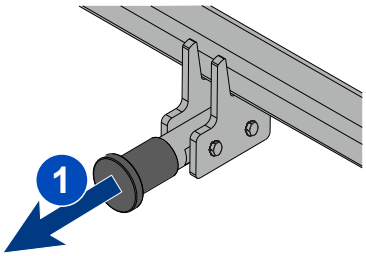
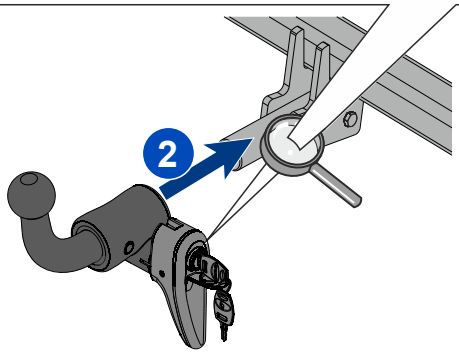
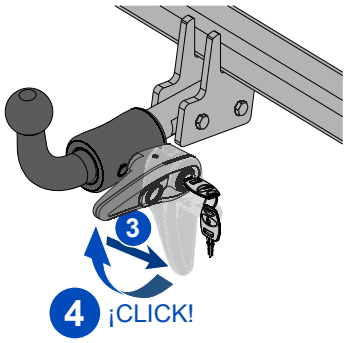

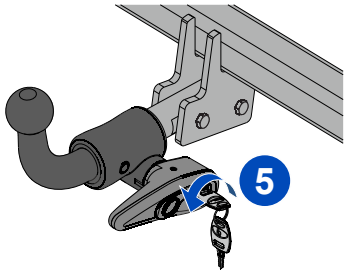
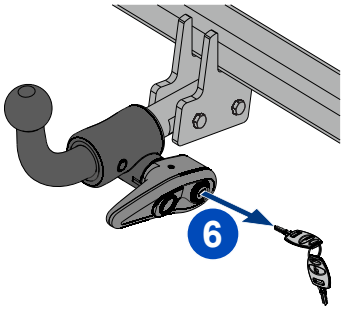
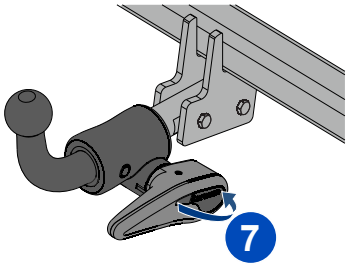

OUT

